FRONT AXLE & FRONT SUSPENSION

SECTION FA

CONTENTS

PRECAUTIONS AND PREPARATION 2
Precautions 2
Special Service Tools 2
Commercial Service Tools 3
FRONT SUSPENSION SYSTEM 4
ON-VEHICLE SERVICE 5
Front Axle and Front Suspension Parts 5
Front Wheel Bearing 5
Front Wheel Alignment 6
Drive Shaft 7
FRONT AXLE 8
Wheel Hub and Knuckle 8
Drive Shaft 12
FRONT SUSPENSION 24
Coil Spring and Strut Assembly 25
Stabilizer Bar 26
Transverse Link and Lower Ball Joint 27
SERVICE DATA AND SPECIFICATIONS (SDS) 29
General Specifications 29
Inspection and Adjustment 29

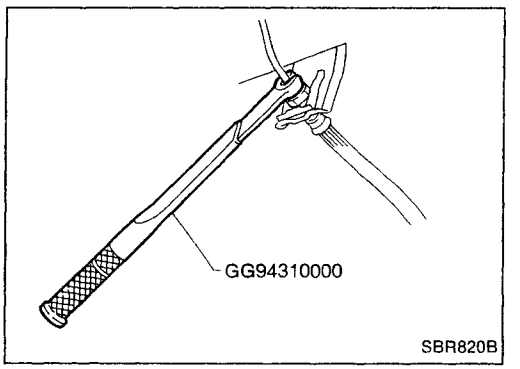

Precautions

- **When installing rubber parts, final tightening must be carried out under unladen condition* with tires on ground.**
  ***: Fuel, radiator coolant and engine oil full. Spare tire, jack, hand tools and mats in designated positions.**
- **After installing removed suspension parts, check wheel alignment and adjust if necessary.**
- **Use flare nut wrench when removing or installing brake tubes.**
- **Always torque brake lines when installing.**

Special Service Tools

Tool number Tool name	Description	
HT72520000 Ball joint remover	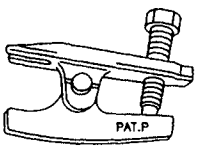 NT146	Removing tie-rod outer end and lower ball joint
HT71780000 Spring compressor	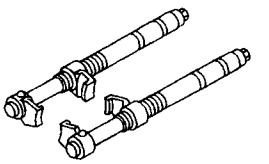 NT144	Removing and installing coil spring
ST35652000 Strut attachment	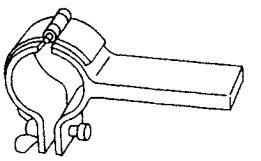 NT145	Fixing strut assembly
GG94310000 Flare nut torque wrench	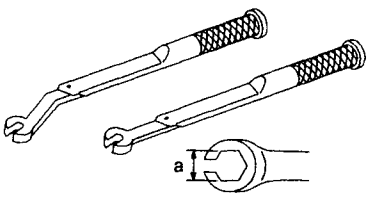 NT406	Removing and installing brake piping **a: 10 mm (0.39 in)**
KV38106700 KV38106800 Differential side oil seal protector	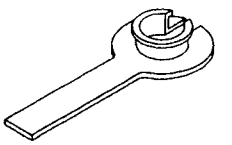 NT147	Installing drive shaft LH: KV38106700 RH: KV38106800

Commercial Service Tools

Tool name	Description	
Front wheel hub drift	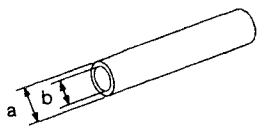 NT065	Removing wheel hub **a: 42 mm (1.65 in) dia.** **b: 33 mm (1.30 in) dia.**
Front wheel bearing outer race drift	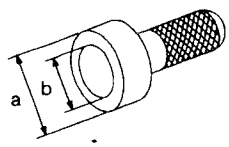 NT115	Removing and installing wheel bearing outer race **a: 76 mm (2.99 in) dia.** **b: 72 mm (2.83 in) dia.**
Grease seal drift	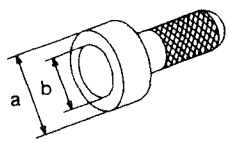 NT115	Installing outer grease seal **a: 81 mm (3.19 in) dia.** **b: 76 mm (2.99 in) dia.**
Attachment Wheel alignment	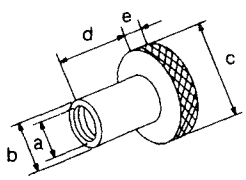 NT148	Measuring wheel alignment **a: Screw M22 x 1.5** **b: 35 (1.38) dia.** **c: 65 (2.56) dia.** **d: 56 (2.20)** **e: 12 (0.47)** Unit: mm (in)
Equivalent to GG94310000 ① Flare nut crows foot ② Torque wrench	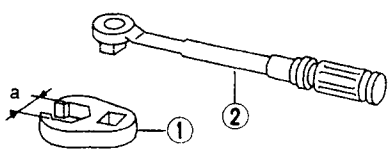 NT360	Removing and installing brake piping **a: 10 mm (0.39 in)**

FA

SEC. 391•400•401

When installing rubber parts, final tightening must be carried out under unladen condition* with tires on ground.
*** Fuel, radiator coolant and engine oil full. Spare tire, jack, hand tools and mats in designated positions.**

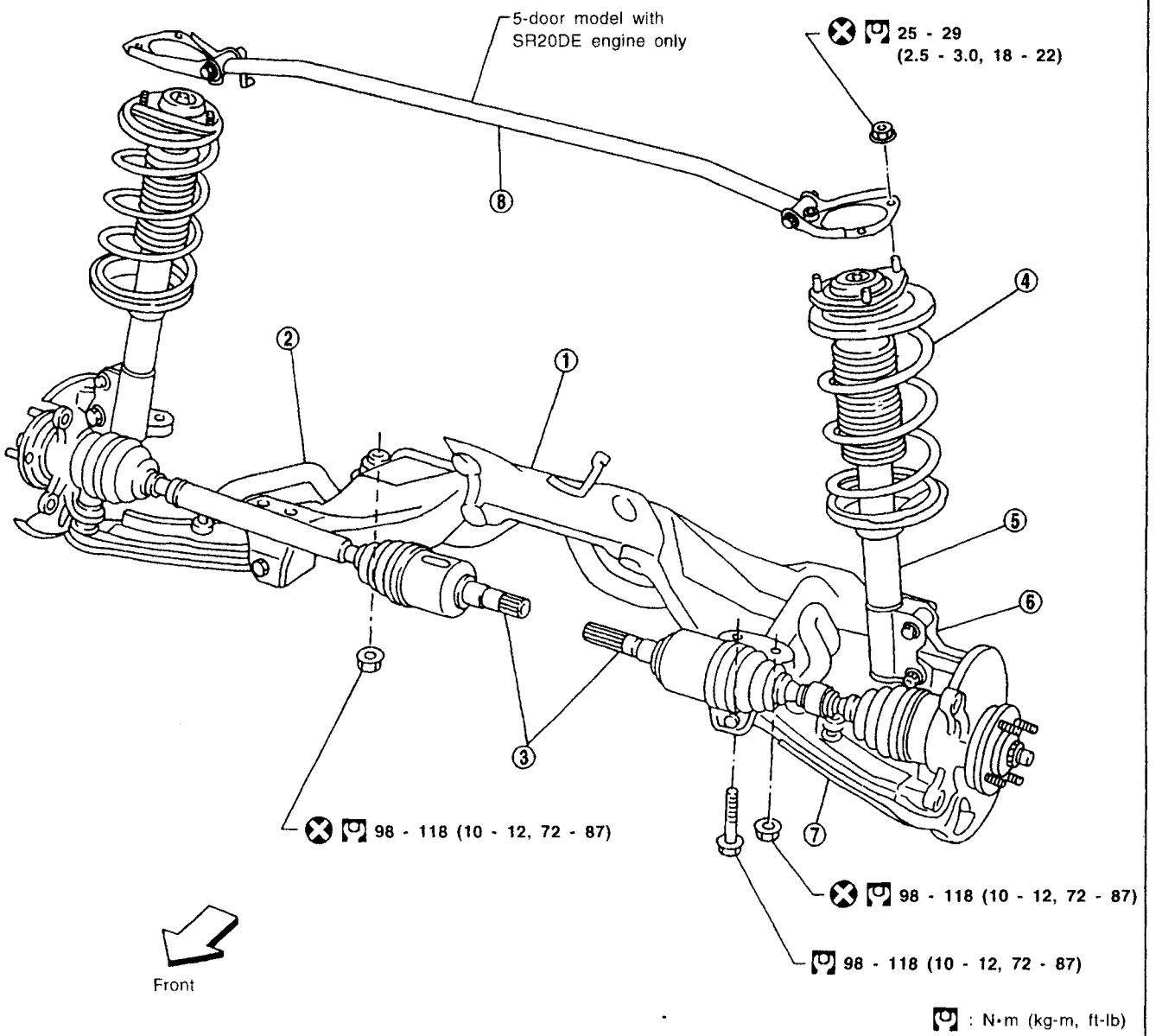

① Suspension member
② Stabilizer bar
③ Drive shaft
④ Coil spring
⑤ Strut assembly
⑥ Knuckle
⑦ Transverse link
⑧ Front strut tower bar

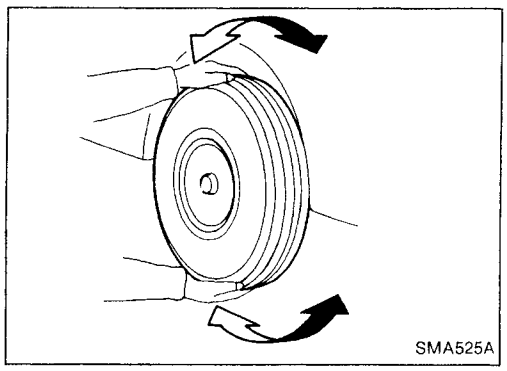

Front Axle and Front Suspension Parts

Check front axle and front suspension parts for excessive play, cracks, wear or other damage.

- Shake each front wheel to check for excessive play.
- Make sure that cotter pins are inserted.
- Retighten all axle and suspension nuts and bolts to the specified torque.
  Tightening torque:
  Refer to FRONT SUSPENSION (FA-24).

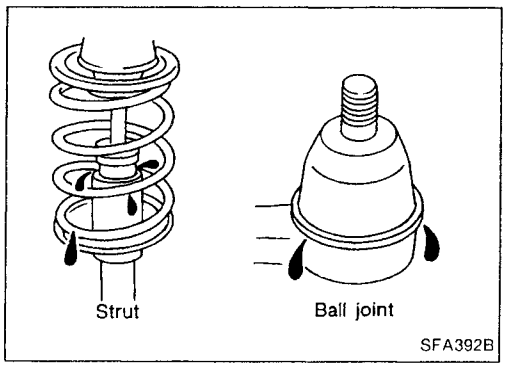

- Check strut (shock absorber) for oil leakage or other damage.
- Check suspension ball joint for grease leakage and ball joint dust cover for cracks or other damage.
  If ball joint dust cover is cracked or damaged, replace transverse link.

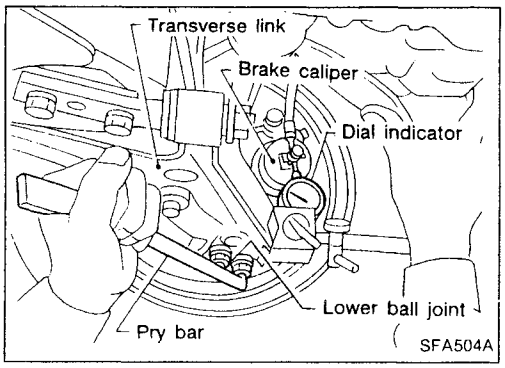

- Check suspension ball joint end play.

a. Jack up front of vehicle and set the stands.
b. Clamp dial indicator onto transverse link and place indicator tip on lower edge of brake caliper.
c. Make sure front wheels are straight and brake pedal is depressed.
d. Place a pry bar between transverse link and inner rim of road wheel.
e. While raising and releasing pry bar, observe maximum dial indicator value. **Vertical end play: 0 mm (0 in)**
f. If ball joint vertical end play exists, remove transverse link and recheck the ball joint. Refer to FA-27.

FA

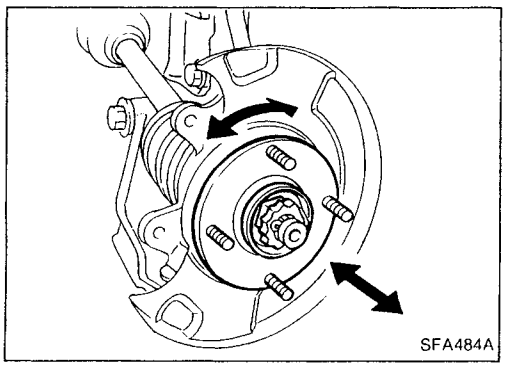

Front Wheel Bearing

- Check that wheel bearings operate smoothly.
- Check axial end play.
  Axial end play: 0.05 mm (0.0020 in) or less
- If out of specification or wheel bearing does not turn smoothly, replace wheel bearing assembly.
  Refer to FRONT AXLE — Wheel Hub and Knuckle (FA-8).

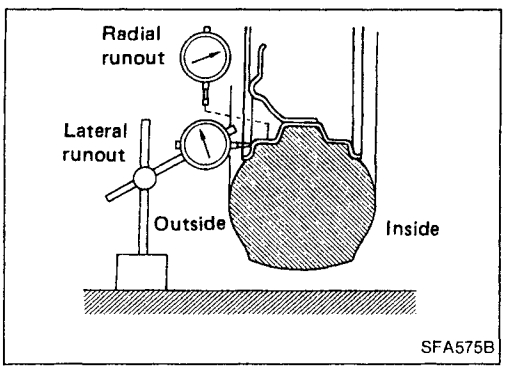

Front Wheel Alignment

Before checking front wheel alignment, be sure to make a preliminary inspection (Unladen*).

*: Fuel, radiator coolant and engine oil full. Spare tire, jack, hand tools and mats in designated positions.

PRELIMINARY INSPECTION

1. Check tires for wear and improper inflation.
2. Check wheel runout.
   Wheel runout:
   Refer to SDS (FA-30).
3. Check front wheel bearings for looseness.
4. Check front suspension for looseness.
5. Check steering linkage for looseness.
6. Check that struts work properly.
7. Check vehicle posture (Unladen).

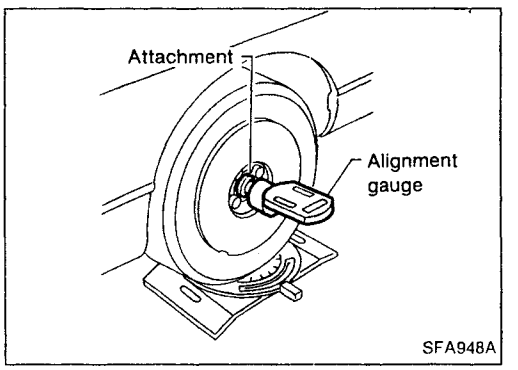

CAMBER, CASTER AND KINGPIN INCLINATION

Camber, caster and kingpin inclination are preset at factory and cannot be adjusted.

1. Measure camber, caster and kingpin inclination of both right and left wheels with a suitable alignment gauge.
   Camber, Caster and Kingpin inclination:
   Refer to SDS (FA-29).
2. If camber, caster or kingpin inclination is not within specification, inspect front suspension parts. Replace damaged or worn out parts.

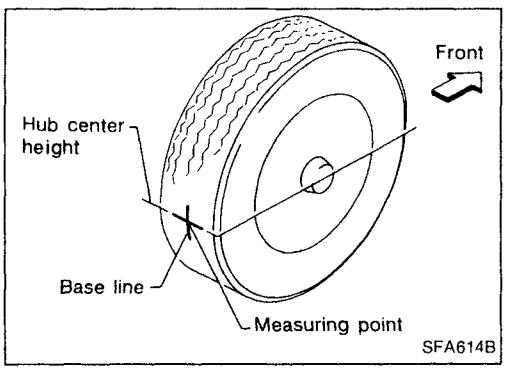

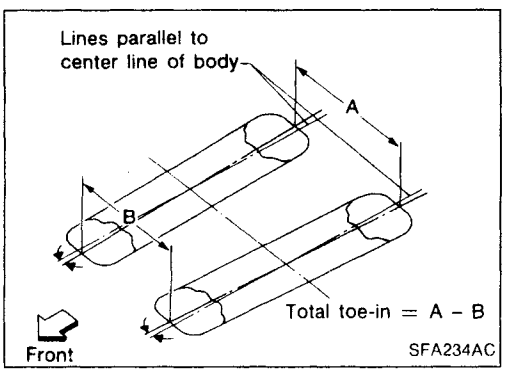

TOE-IN

Measure toe-in using following procedure.

WARNING:

- **Perform following procedure always on a flat surface.**
- **Make sure that no person is in front of the vehicle before pushing it.**

1. Bounce front of vehicle up and down to stabilize the posture.
2. Push the vehicle straight ahead about 5 m (16 ft).
3. Put a mark on base line of tread (rear side) of both tires at the same height as hub center. These are measuring points.
4. Measure distance "A" (rear side).
5. Push the vehicle slowly ahead to rotate the wheels 180 degrees (1/2 turn).

If the wheels have rotated more than 180 degrees (1/2 turn), try the above procedure again from the beginning. Never push vehicle backward.

6. Measure distance "B" (front side).
   Total toe-in
   Refer to SDS (FA-29).

Front Wheel Alignment (Cont'd)

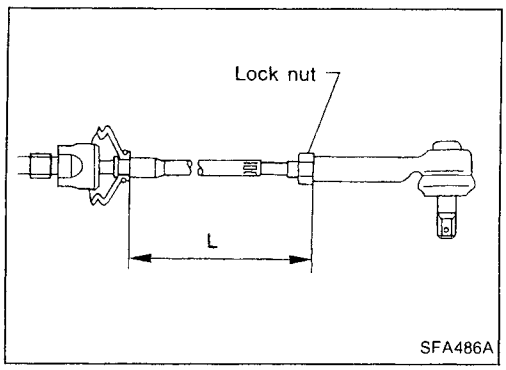

7. Adjust toe-in by varying the length of steering tie-rods.
a. Loosen lock nuts.
b. Adjust toe-in by screwing tie-rods in and out.
   Standard length "L":
   Refer to ST section.
c. Tighten lock nuts to specified torque.
   Lock nut tightening torque:
   Refer to ST section.

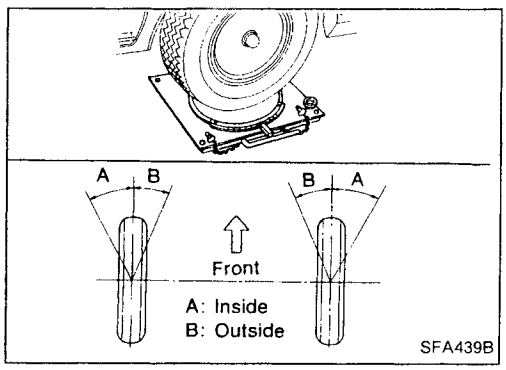

FRONT WHEEL TURNING ANGLE

1. Set wheels in straight-ahead position. Then move vehicle forward until front wheels rest on turning radius gauge properly.
2. Rotate steering wheel all the way right and left; measure turning angle.

Do not hold the steering wheel on full lock for more than 15 seconds.

Wheel turning angle (Full turn):
Refer to SDS (FA-29).

Drive Shaft

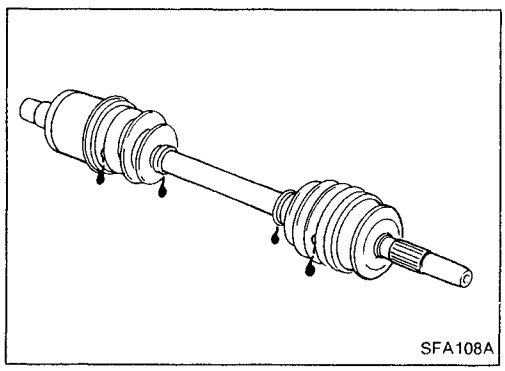

- Check for grease leakage or other damage.

FA

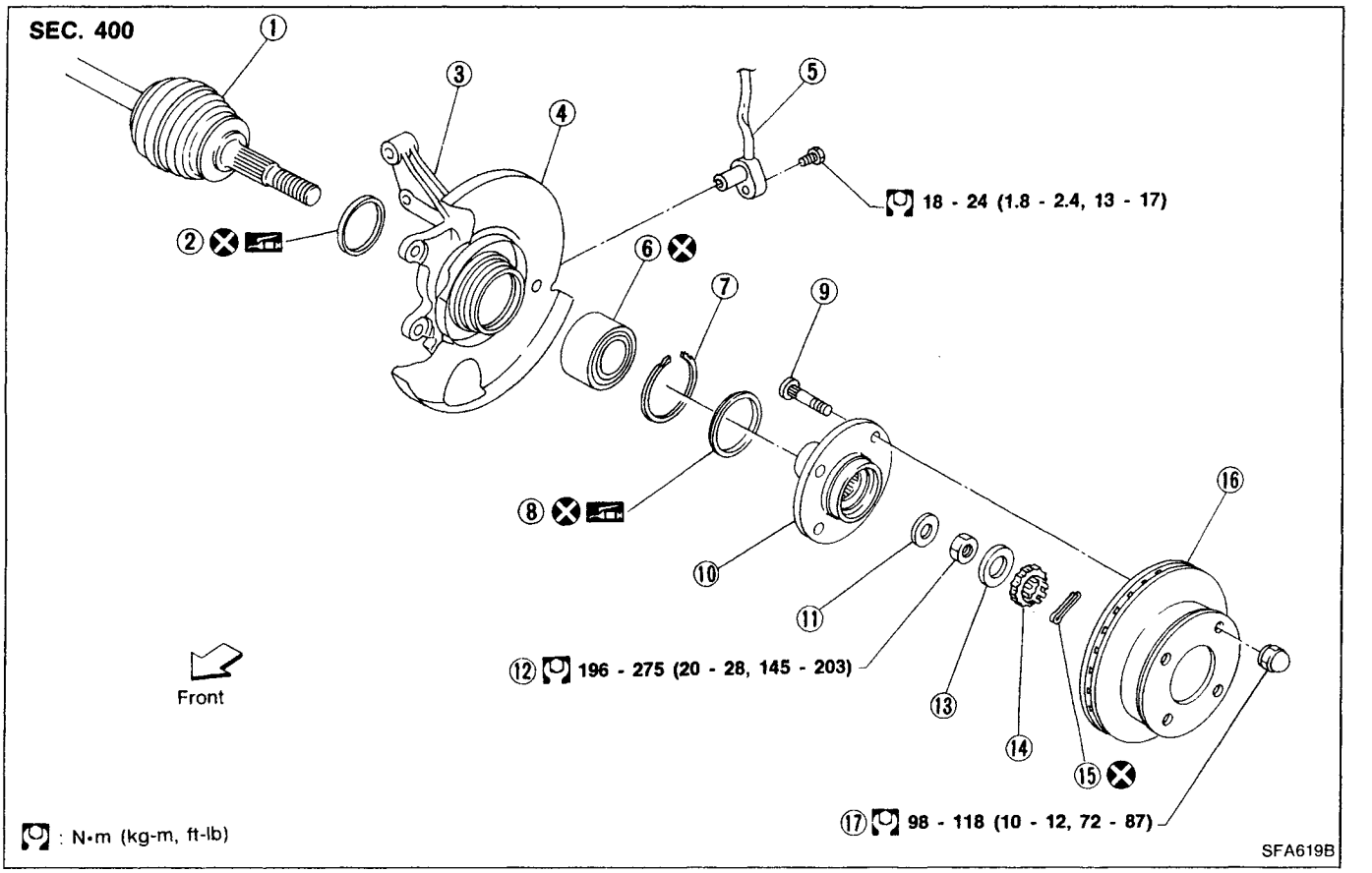

① Drive shaft
② Inner grease seal
③ Knuckle
④ Baffle plate
⑤ ABS sensor
⑥ Wheel bearing assembly
⑦ Snap ring
⑧ Outer grease seal
⑨ Hub bolt
⑩ Wheel hub
⑪ Plain washer
⑫ Wheel bearing lock nut
⑬ Insulator
⑭ Adjusting cap
⑮ Cotter pin
⑯ Disc rotor
⑰ Wheel nut

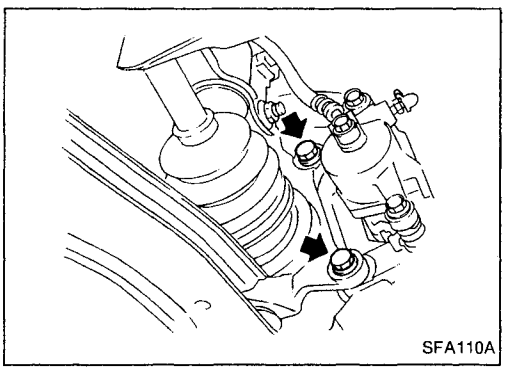

Wheel Hub and Knuckle

REMOVAL

CAUTION:

Before removing the front axle assembly, disconnect the ABS wheel sensor from the assembly. Then move it away from the front axle assembly area. Failure to do so may result in damage to the sensor wires and the sensor becoming inoperative.

1. Remove wheel bearing lock nut.
2. Remove brake caliper assembly and rotor.

Brake hose need not be disconnected from brake caliper.
In this case, suspend caliper assembly with wire so as not to stretch brake hose.
Be careful not to depress brake pedal, or piston will pop out.
Make sure brake hose is not twisted.

Wheel Hub and Knuckle (Cont'd)

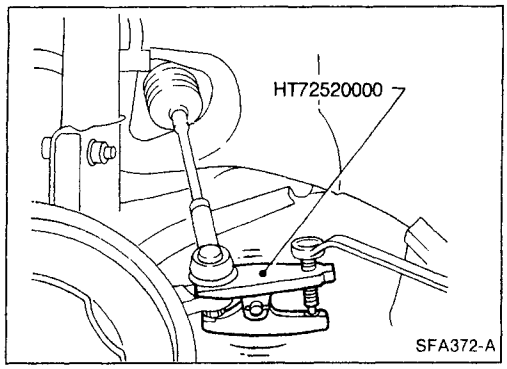

3. Separate tie-rod from knuckle with Tool.

Install stud nut on stud bolt to prevent damage to stud bolt.

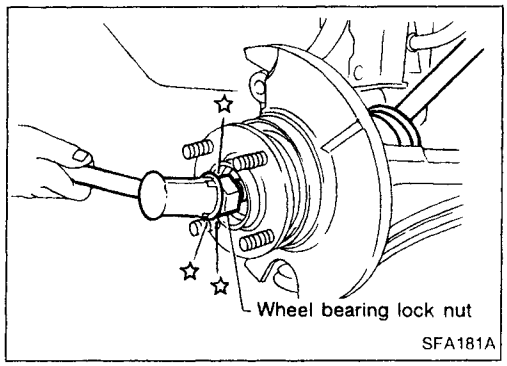

4. Separate drive shaft from knuckle by lightly tapping it. If it is hard to remove, use a puller.

Cover boots with shop towel so as not to damage them when removing drive shaft.

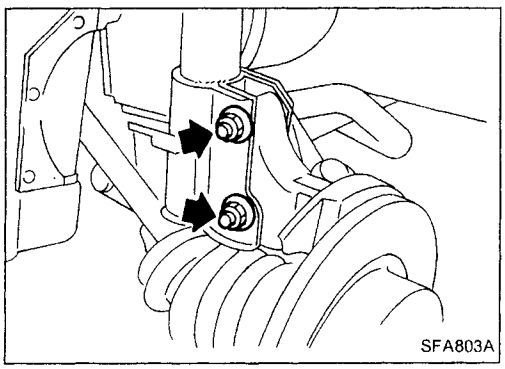

5. Remove strut lower mounting bolts.

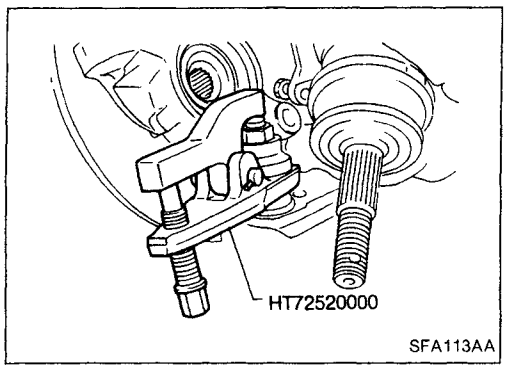

6. Loosen lower ball joint tightening nut.
7. Separate knuckle from lower ball joint stud with Tool.
8. Remove knuckle from transverse link.

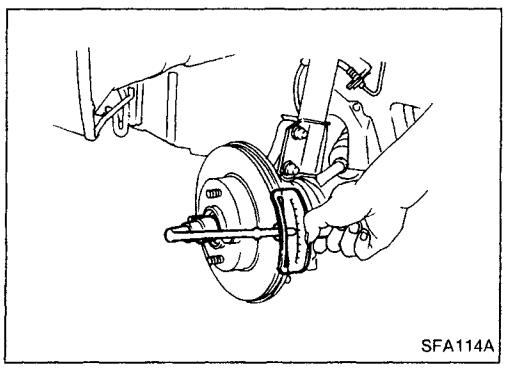

INSTALLATION

1. Install knuckle with wheel hub.

- Replace strut lower mounting nuts.

When installing knuckle to strut, be sure to hold bolts and tighten nuts.

[O]: 114 - 133 N·m (11.6 - 13.6 kg-m, 84 - 98 ft-lb)

Before tightening, apply oil to threaded portion of drive shaft and both sides of plain washer.

2. Tighten wheel bearing lock nut.

[O]: 196 - 275 N·m (20 - 28 kg-m, 145 - 203 ft-lb)

FA

Wheel Hub and Knuckle (Cont'd)

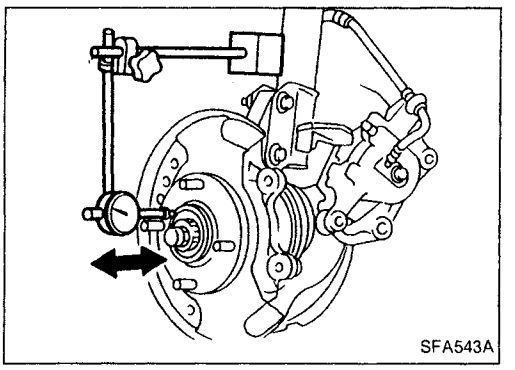

3. Check wheel bearing axial end play.
   Axial end play:
   0.05 mm (0.0020 in) or less

DISASSEMBLY

CAUTION:
When removing wheel hub or wheel bearing from knuckle, replace wheel bearing assembly (outer race, inner races and grease seals) with a new one.

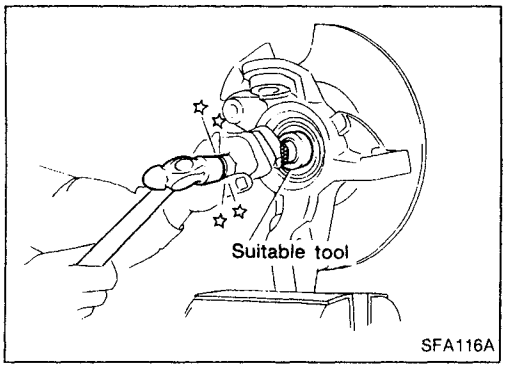

Wheel hub

Drive out hub with inner race (outside) from knuckle with a suitable tool.

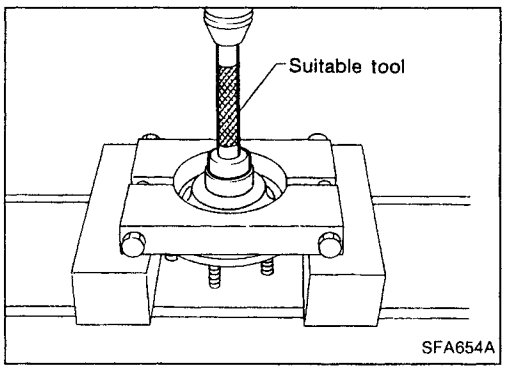

Wheel bearing

When replacing wheel bearing, replace wheel bearing assembly (inner races and outer race).

1. Remove bearing inner race (outside), then remove outer grease seal.

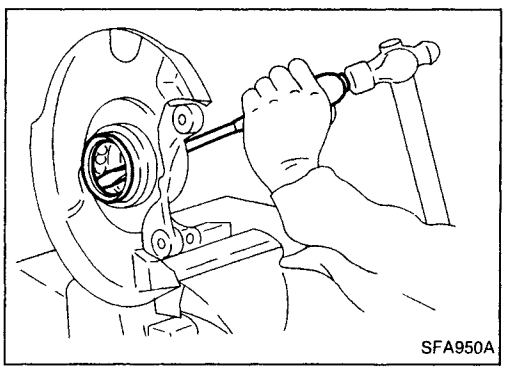

2. Remove inner grease seal from knuckle.

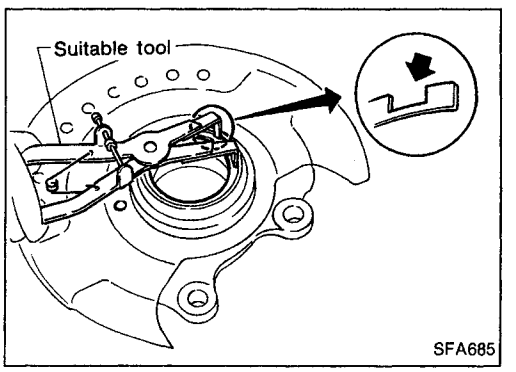

3. Remove snap ring.

Wheel Hub and Knuckle (Cont'd)

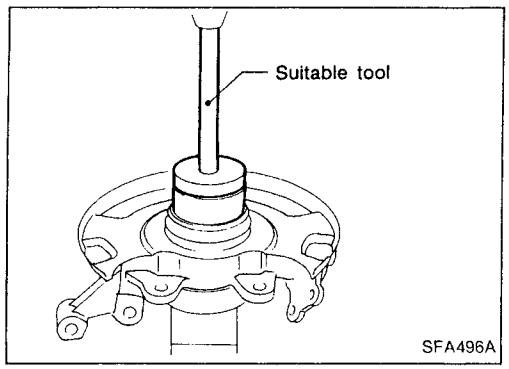

4. Press out bearing outer race.

INSPECTION

Wheel hub and knuckle

Check wheel hub and knuckle for cracks by using a magnetic exploration or dyeing test.

Snap ring

Check snap ring for wear or cracks. Replace if necessary.

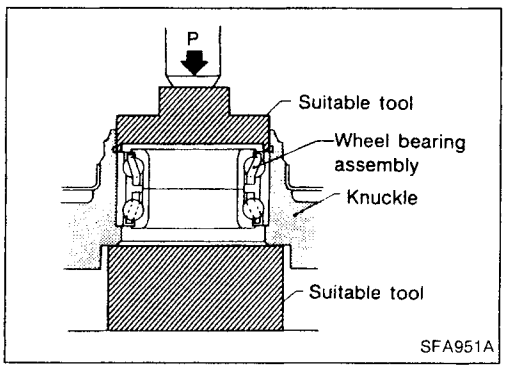

ASSEMBLY

1. Press new wheel bearing assembly into knuckle.
   Maximum load P:
   29 kN (3 ton, 3.3 US ton, 3.0 Imp ton)

CAUTION:

- **Do not press inner race of wheel bearing assembly.**
- **Do not apply oil or grease to mating surfaces of wheel bearing outer race and knuckle.**

2. Install snap ring into groove of knuckle.

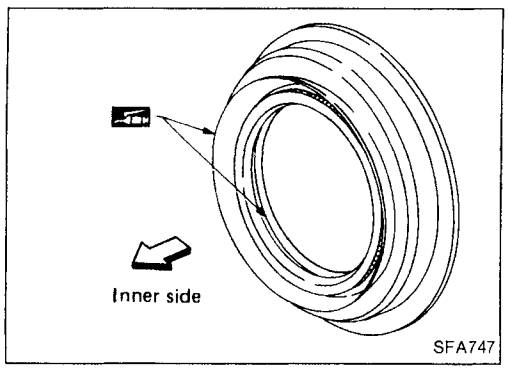

3. Pack grease seal lip with multi-purpose grease.

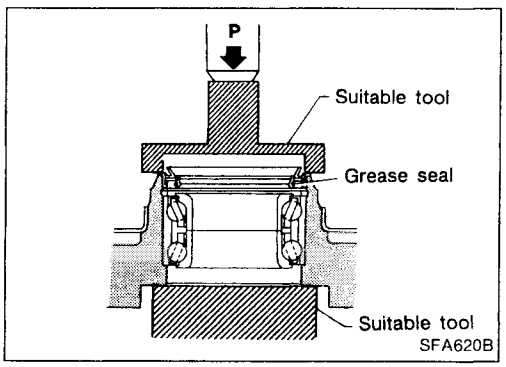

4. Install outer grease seal.
   Maximum load P:
   10 kN (1 ton, 1.1 US ton, 1.0 Imp ton)

FA

Wheel Hub and Knuckle (Cont'd)

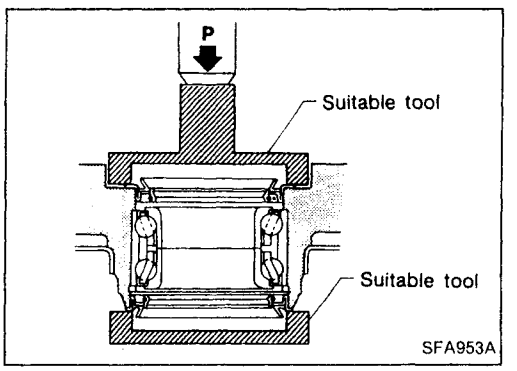

5. Install inner grease seal.
   Maximum load P:
   10 kN (1 ton, 1.1 US ton, 1.0 Imp ton)

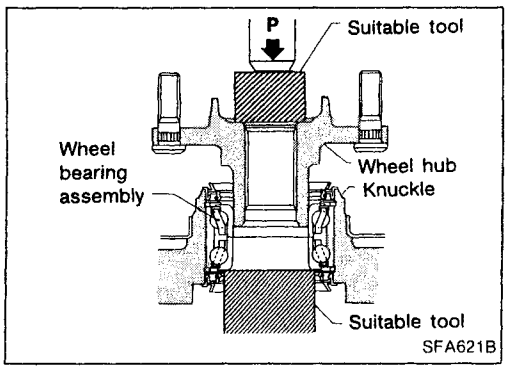

6. Press wheel hub into knuckle.
   Maximum load P:
   29 kN (3 ton, 3.3 US ton, 3.0 Imp ton)

Be careful not to damage grease seal.

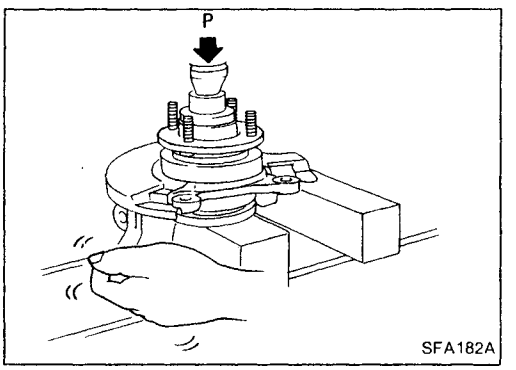

7. Check bearing operation.
a. Add load P with press.
   Load P:
   34.3 - 49.0 kN (3.5 - 5.0 ton, 3.9 - 5.5 US ton, 3.44 - 4.92 Imp ton)
b. Spin knuckle several turns in both directions.
c. Make sure that wheel bearings operate smoothly.

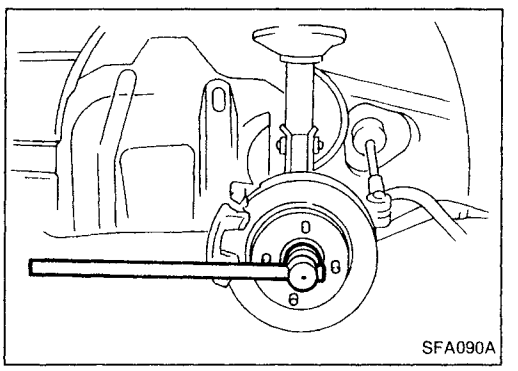

Drive Shaft

REMOVAL

1. Remove wheel bearing lock nut.

Brake caliper need not be disconnected.
Do not twist or stretch brake hose when moving components.

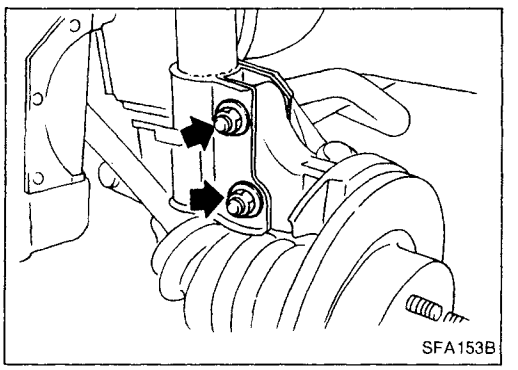

2. Remove strut lower mounting bolts.
3. Remove brake hose clip.

Drive Shaft (Cont'd)

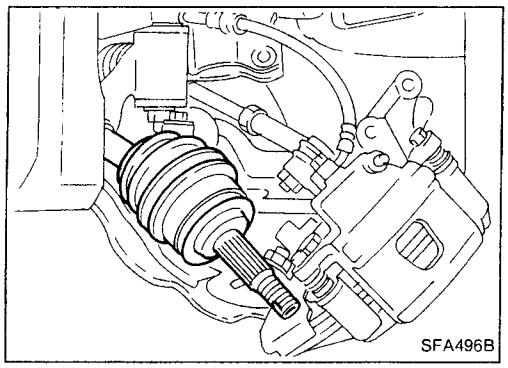

4. Separate drive shaft from knuckle by slightly tapping it. If it is hard to remove, use a puller.

When removing drive shaft, cover boots with shop towel to prevent damage to them.

Refer to FRONT AXLE — Wheel Hub and Knuckle (FA-8).

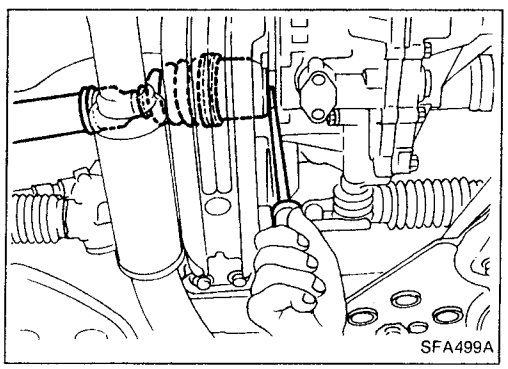

5. Remove right drive shaft from transaxle.

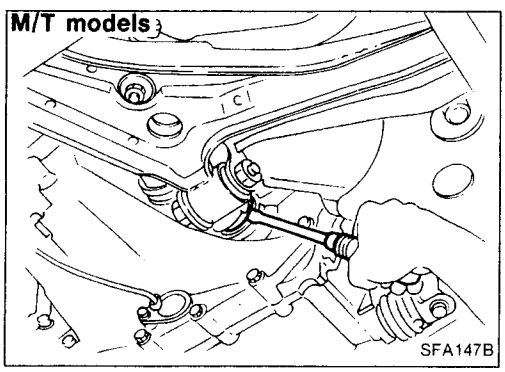

6. Remove left drive shaft from transaxle.

—For M/T models—

- Pry off drive shaft from transaxle as shown at left.

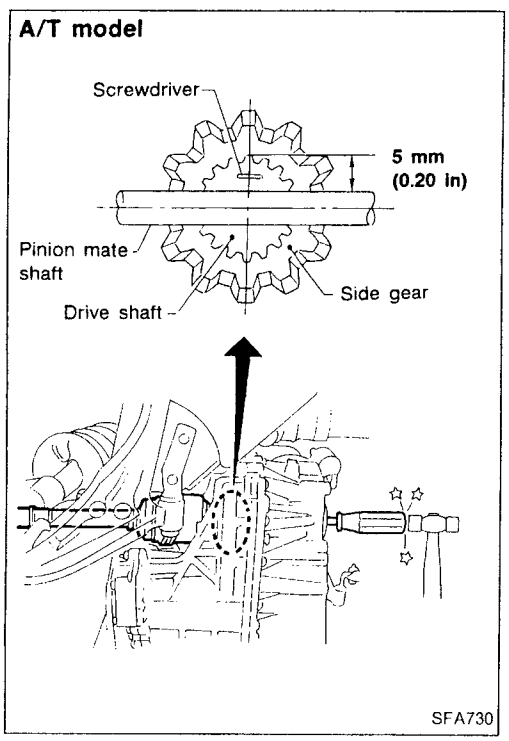

—For A/T models—

- Insert screwdriver into transaxle opening for right drive shaft and strike with a hammer.

Be careful not to damage pinion mate shaft and side gear.

FA

Drive Shaft (Cont'd)

INSTALLATION

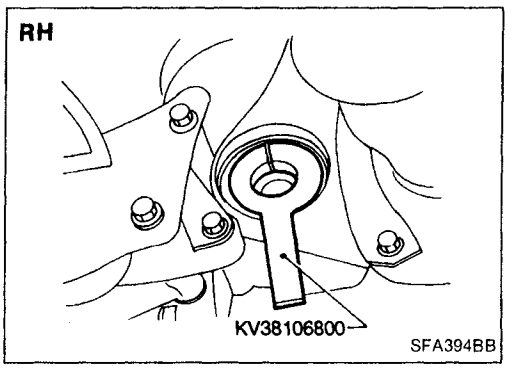

Transaxle side

1. Drive a new oil seal to transaxle. Refer to MT or AT section.
2. Set Tool along the inner circumference of oil seal.

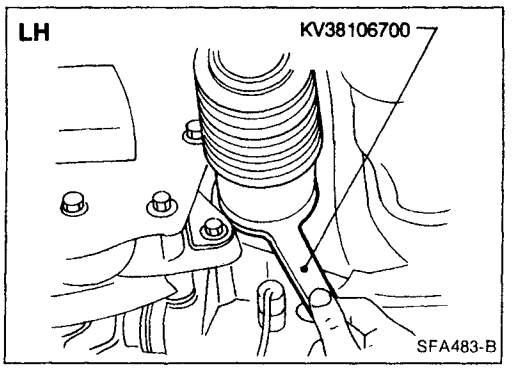

3. Insert drive shaft into transaxle. Be sure to properly align the serrations and then withdraw Tool.
4. Push drive shaft, then press-fit circular clip on the drive shaft into circular clip groove of side gear.
5. After its insertion, try to pull the flange out of the slide joint by hand. If it pulls out, the circular clip is not properly meshed with the side gear.

Wheel side

- Install drive shaft into knuckle.
- Tighten wheel bearing lock nut.
  Refer to FRONT AXLE — Wheel Hub and Knuckle (FA-8).

Drive Shaft (Cont'd)

COMPONENTS

GA and CD engine model

SEC. 391

Circular clip:

Circular clips should be properly meshed with differential side gear (transaxle side) and with joint assembly (wheel side). Make sure they will not come out.

Be careful not to damage boots. Use suitable protector or cloth during removal and installation.

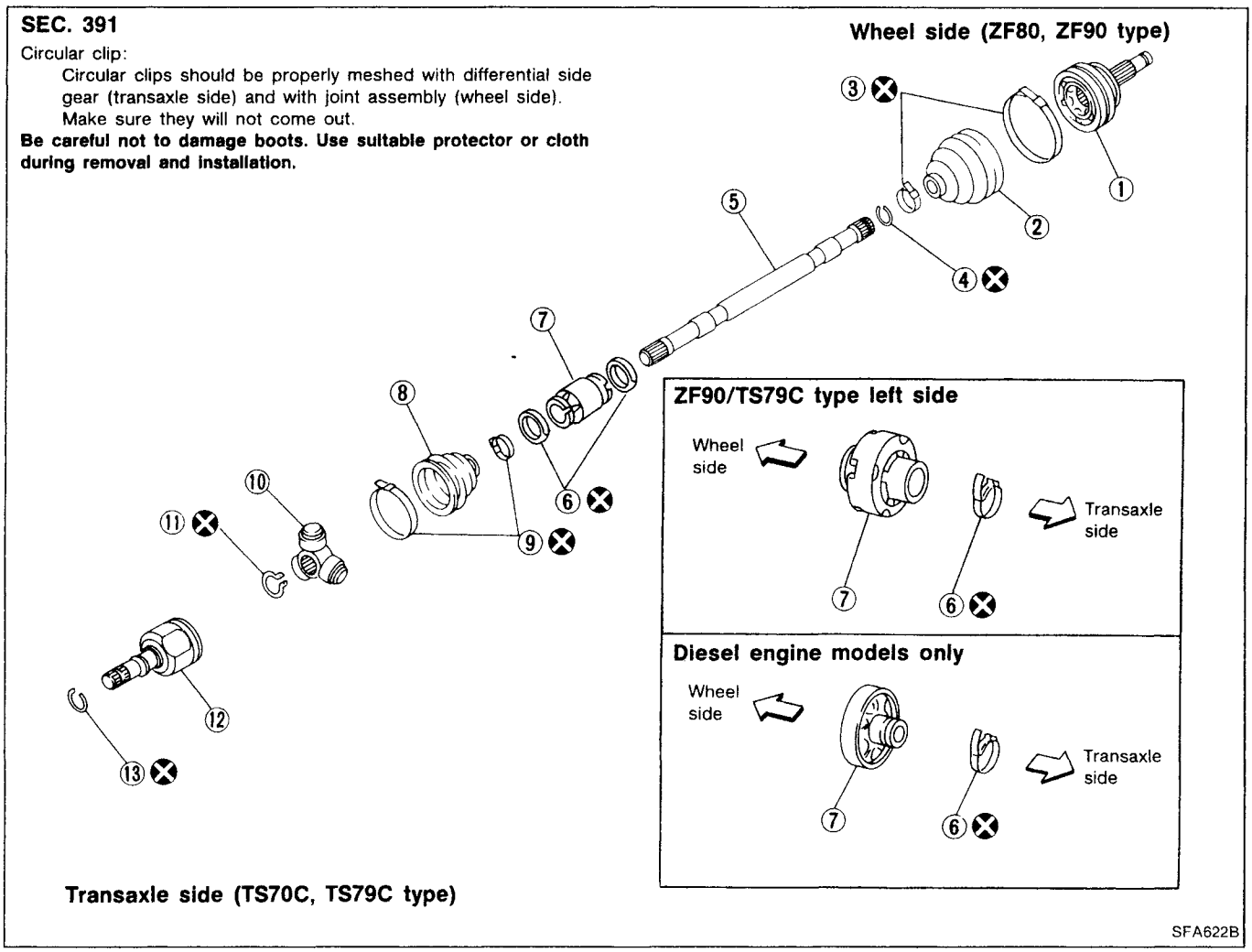

① Joint assembly
② Boot
③ Boot band
④ Circular clip
⑤ Drive shaft
⑥ Dynamic damper band
⑦ Dynamic damper
⑧ Boot
⑨ Boot band
⑩ Spider assembly
⑪ Snap ring
⑫ Slide joint housing
⑬ Circular clip

FA

Drive Shaft (Cont'd)

SR20DE engine model

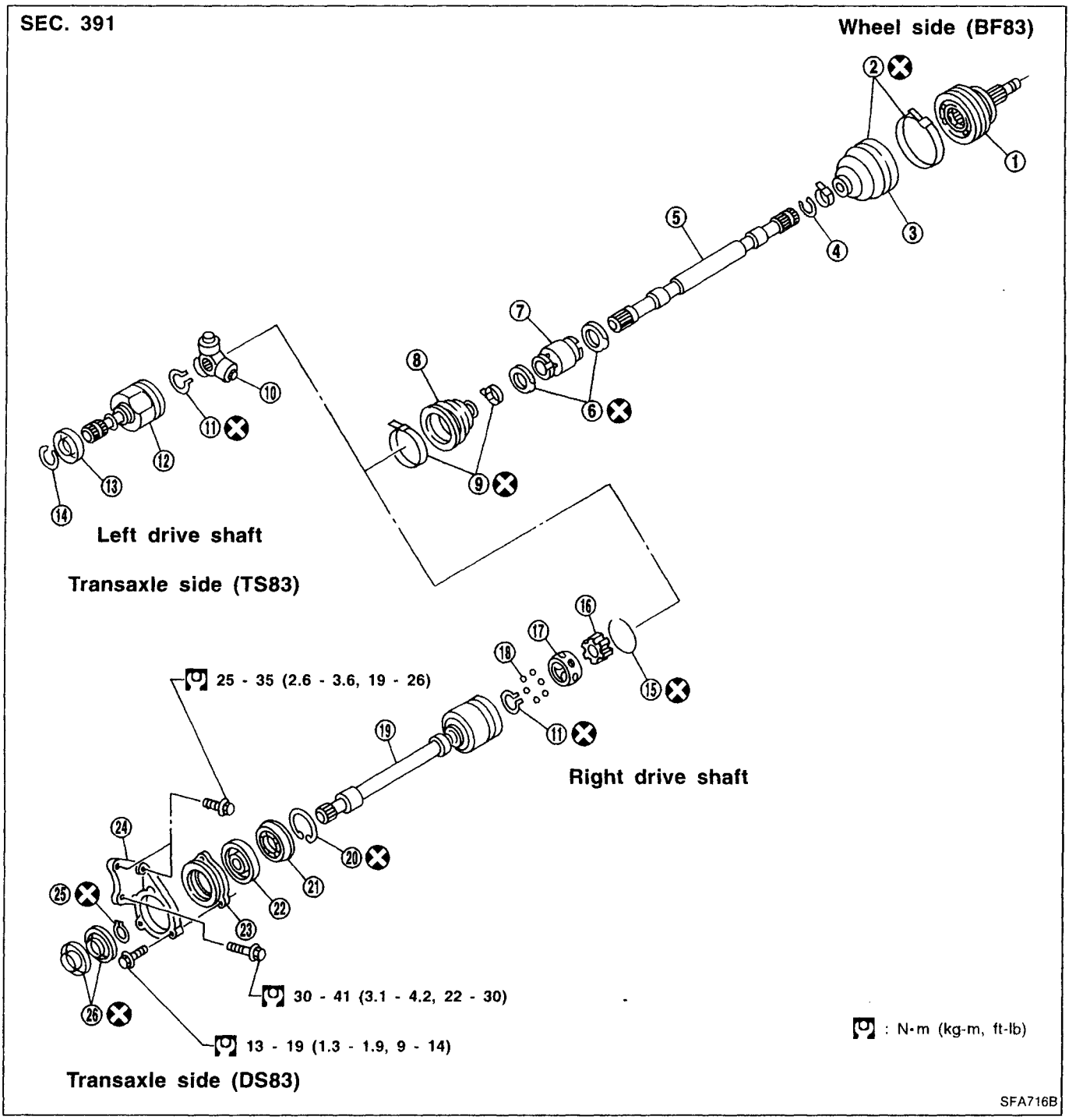

① Joint assembly
② Boot band
③ Boot
④ Circular clip B
⑤ Drive shaft
⑥ Band
⑦ Dynamic damper
⑧ Boot
⑨ Boot band
⑩ Spider assembly
⑪ Snap ring C
⑫ Slide joint housing
⑬ Dust shield
⑭ Circular clip A
⑮ Snap ring A
⑯ Inner race
⑰ Cage
⑱ Ball
⑲ Slide joint housing with extension shaft
⑳ Snap ring E
㉑ Dust shield
㉒ Support bearing
㉓ Support bearing retainer
㉔ Bracket
㉕ Snap ring D
㉖ Dust shield

Drive Shaft (Cont'd)

DISASSEMBLY

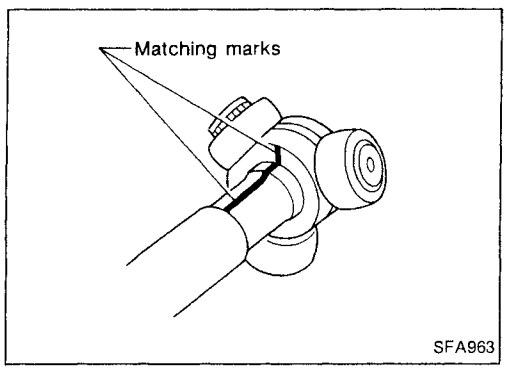

Transaxle side (TS70C, TS79C, TS83 type)

1. Remove boot bands.
2. Put matching marks on slide joint housing and drive shaft before separating joint assembly.
3. Put matching marks on spider assembly and drive shaft.

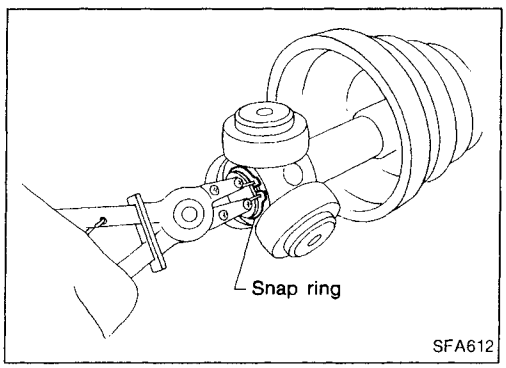

4. Pry off snap ring, then remove spider assembly.

CAUTION:
Do not disassemble spider assembly.

5. Draw out boot.

Cover drive shaft serration with tape to prevent damage to the boot.

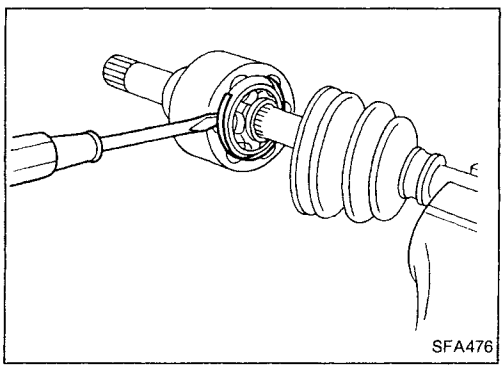

Transaxle side (DS83 type)

1. Remove boot bands.
2. Put matching marks on slide joint housing and inner race, before separating joint assembly.
3. Pry off snap ring "A" with a screwdriver, and pull out slide joint housing.

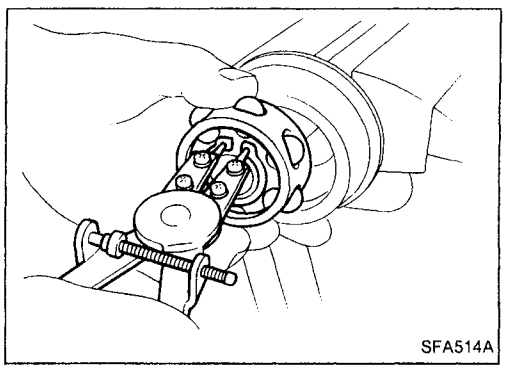

4. Put matching marks on inner race and drive shaft.
5. Remove snap ring "C", then remove ball cage, inner race and balls as a unit.
6. Draw out boot.

Cover drive shaft serrations with tape so as not to damage the boot.

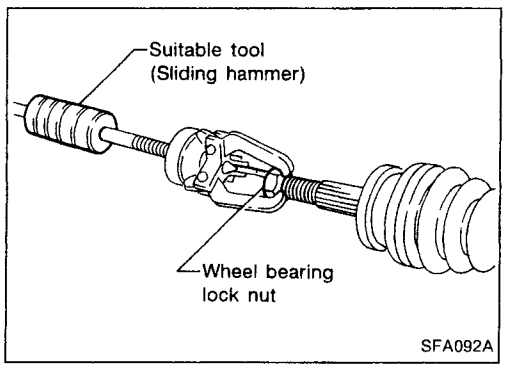

Wheel side

CAUTION:
The joint on the wheel side cannot be disassembled.

1. Before separating joint assembly, put matchmarks on drive shaft and joint assembly.
2. Separate joint assembly with a suitable tool.

Be careful not to damage threads on drive shaft.

3. Remove boot bands.

FA

Drive Shaft (Cont'd)

Support bearing

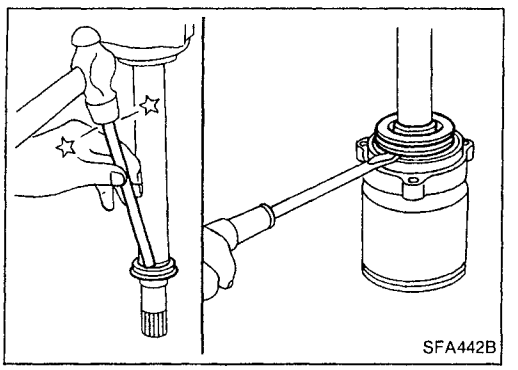

1. Remove dust shield.

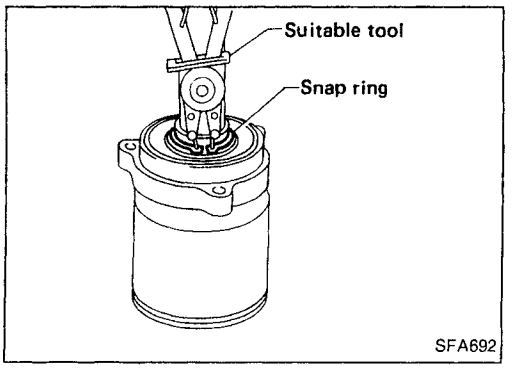

2. Remove snap ring.

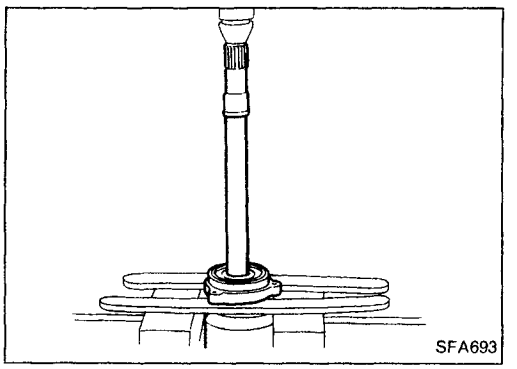

3. Press support bearing assembly off of drive shaft.

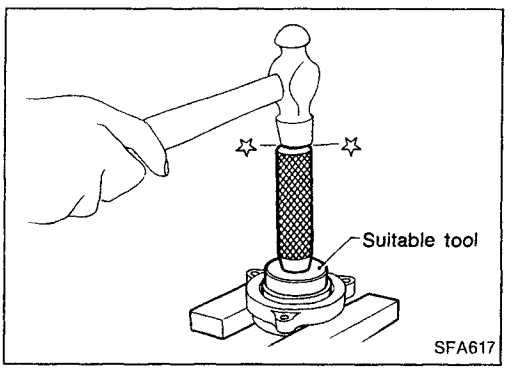

4. Separate support bearing from retainer.

INSPECTION

Thoroughly clean all parts in cleaning solvent, and dry with compressed air. Check parts for evidence of deformation or other damage.

Drive shaft

Replace drive shaft if it is twisted or cracked.

Drive Shaft (Cont'd)

Boot

Check boot for fatigue, cracks, or wear. Replace boot with new boot bands.

Joint assembly (Transaxle side)

- Check spider assembly for bearing, roller and washer damage. Replace spider assembly if necessary.
- Check housing for any damage. Replace housing set and spider assembly, if necessary.

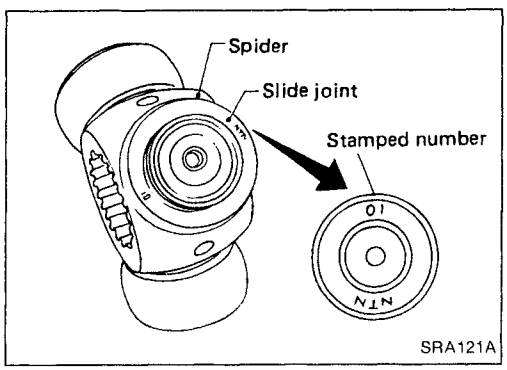

- When replacing only spider assembly, select a new spider assembly from among those listed in table below. Ensure the number stamped on sliding joint is the same as that stamped on new part.

Housing alone cannot be replaced. It must be replaced together with spider assembly.

TS70C

Stamped number	Part No.
00	39720-51E00
01	39720-51E01
02	39720-51E02
03	39720-51E03

TS79C

Stamped number	Part No.
00	39720-61E00
01	39720-61E01
02	39720-61E02
03	39720-61E03
04	39720-61E04
05	39720-61E05
06	39720-61E06

Joint assembly (Wheel side)

Replace joint assembly if it is deformed or damaged.

ASSEMBLY

- **After drive shaft has been assembled, ensure that it moves smoothly over its entire range without binding.**
- **Use NISSAN GENUINE GREASE or equivalent after every overhaul.**

FA

Drive Shaft (Cont'd)

Wheel side

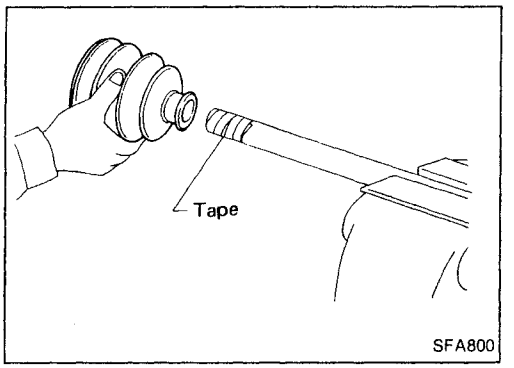

1. Install boot and new small boot band on drive shaft.
Cover drive shaft serration with tape so as not to damage boot during installation.

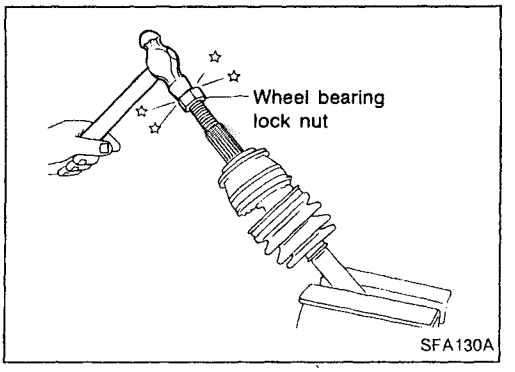

2. Set joint assembly onto drive shaft by lightly tapping it. Install joint assembly securely, ensuring marks which were made during disassembly are properly aligned.

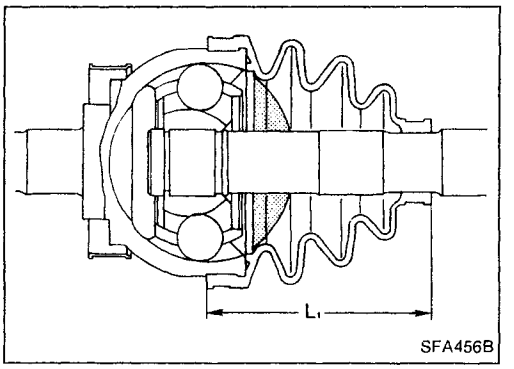

3. Pack drive shaft with specified amount of grease.
   Specified amount of grease:
   ZF80 95 g (3.35 oz)
   ZF90 115 - 125 g (4.06 - 4.41 oz)
   BF83 85 - 105 g (3.00 - 3.70 oz)
4. Make sure that boot is properly installed on the drive shaft groove.
   Set boot so that it does not swell and deform when its length is "L_1".
   Length "L_1":
   ZF80 90.5 - 92.5 mm (3.563 - 3.642 in)
   ZF90 96 - 98 mm (3.78 - 3.86 in)
   BF83 94 - 96 mm (3.70 - 3.78 in)

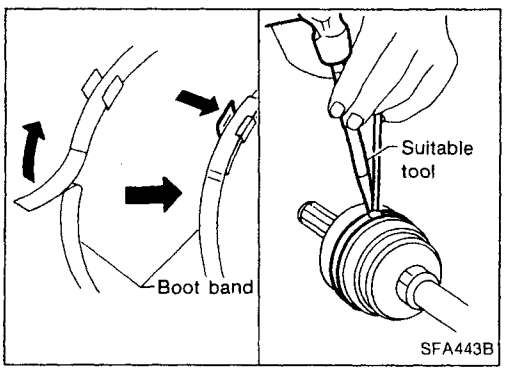

5. Lock new larger and smaller boot bands securely with a suitable tool.

Drive Shaft (Cont'd)

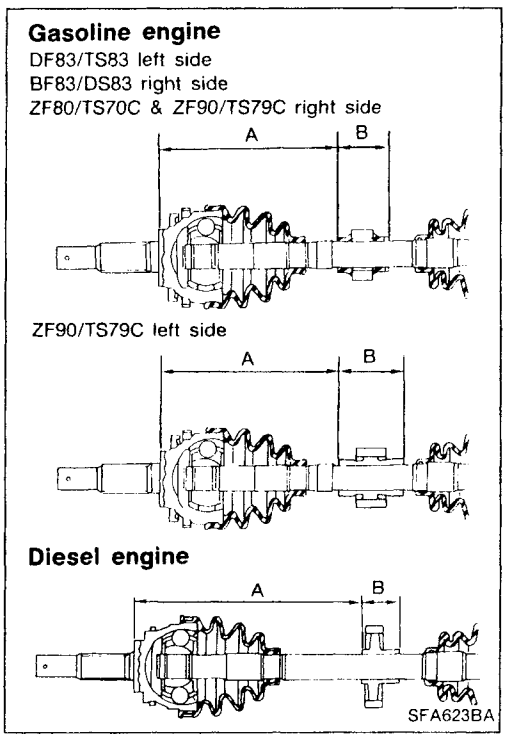

Dynamic damper

1. Use new damper band when reinstalling.
2. Install dynamic damper from stationary-joint side while holding it securely.

Length:

Unit: mm (in)

	ZF80/TS70C	ZF90/TS79C			BF83/TS83, DS83
		Gasoline engine		Diesel engine	
	RH	RH	LH	RH	
"A"	432 - 442 (17.01 - 17.40)		175.3 - 185.3 (6.90 - 7.30)	372.5 - 377.5 (14.67 - 14.86)	169 - 175 (6.65 - 6.89)
"B"	66 (2.60)		58 (2.28)	37 (1.46)	70 (2.76)

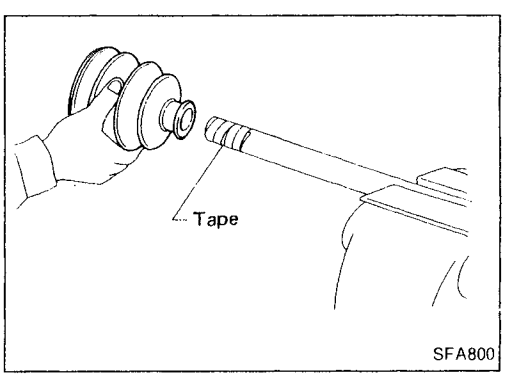

Transaxle side (TS70C, TS79C, TS83 type)

1. Install boot and new small boot band on drive shaft.

Cover drive shaft serration with tape so as not to damage boot during installation.

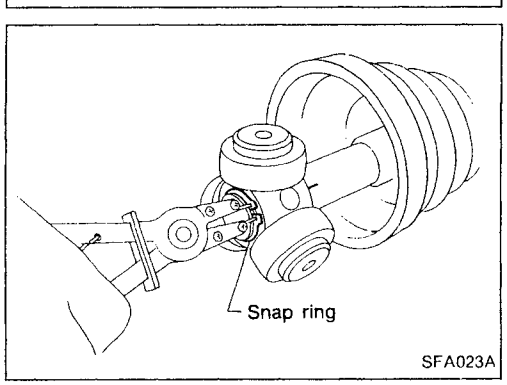

2. Install spider assembly securely, making sure the marks which were made during disassembly are properly aligned.
3. Install new snap ring.

FA

Drive Shaft (Cont'd)

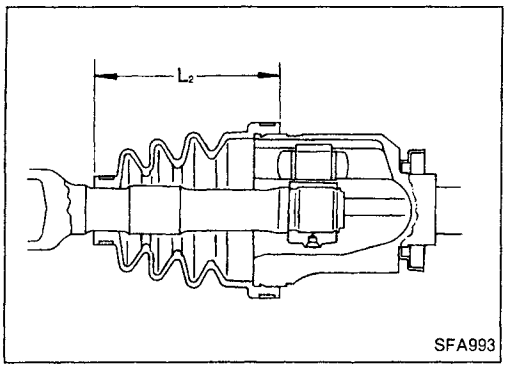

4. Pack drive shaft with specified amount of grease.
   Specified amount of grease:
   TS70C 110 - 120 g (3.88 - 4.23 oz)
   TS79C 155 - 165 g (5.47 - 5.82 oz)
   TS83 130 - 150 g (4.59 - 5.29 oz)
5. Install slide joint housing.
6. Set boot so that it does not swell and deform when its length is "L_2".
   Length "L_2":
   TS70C 95.5 - 97.5 mm (3.76 - 3.84 in)
   TS79C 101.5 - 103.5 mm (4.00 - 4.07 in)
   TS83 98 - 100 mm (3.86 - 3.94 in)

Make sure that boot is properly installed on the drive shaft groove.

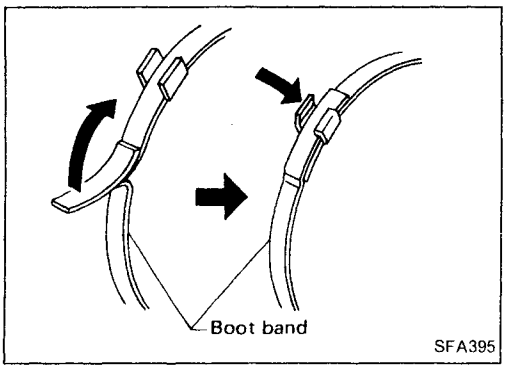

7. Lock new larger and smaller boot bands securely with a suitable tool.

Transaxle side (DS83 type)

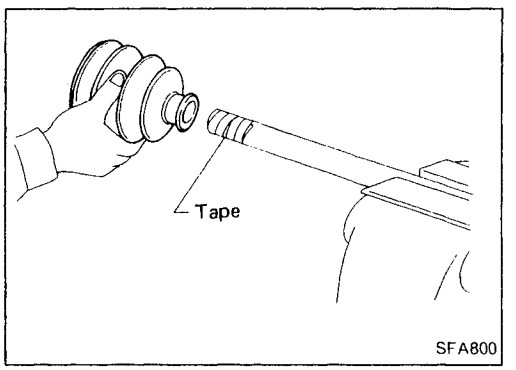

1. Install boot and new small boot band on drive shaft.

Cover drive shaft serration with tape to prevent damage boot during installation.

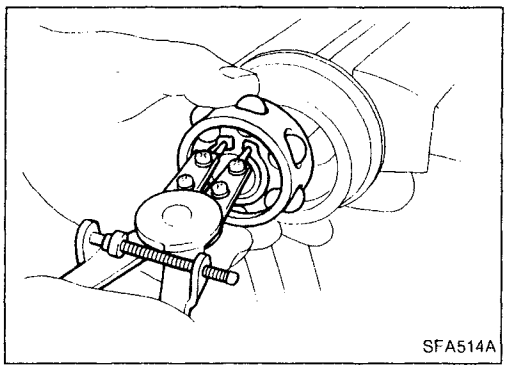

2. Install ball cage, inner race and balls as a unit, making sure the marks which were made during disassembly are properly aligned.
3. Install new snap ring "C".

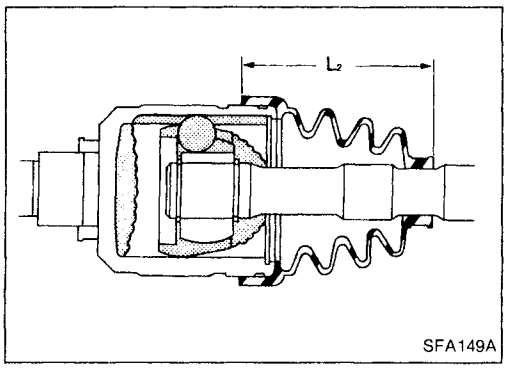

4. Pack drive shaft with specified amount of grease.
   Specified amount of grease:
   115 - 135 g (4.06 - 4.76 oz)
5. Install slide joint housing, then install new snap ring "A".
6. Make sure that boot is properly installed on the drive shaft groove.
   Set boot so that it does not swell and deform when its length is "L_2".
   Length "L_2":
   97 - 99 mm (3.82 - 3.90 in)

Drive Shaft (Cont'd)

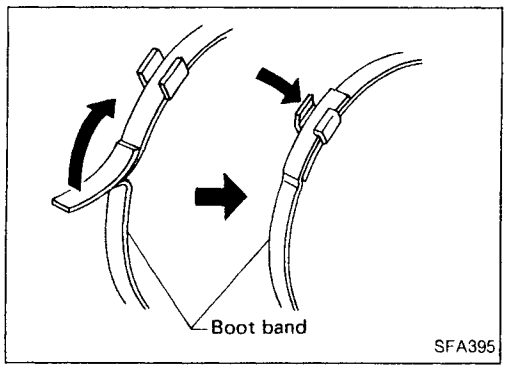

7. Lock new larger and smaller boot bands securely with a suitable tool.

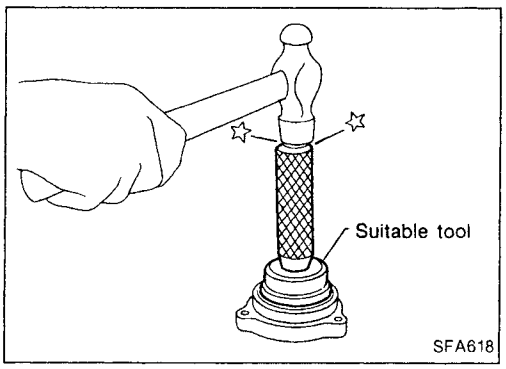

Support bearing

1. Install bearing into retainer.

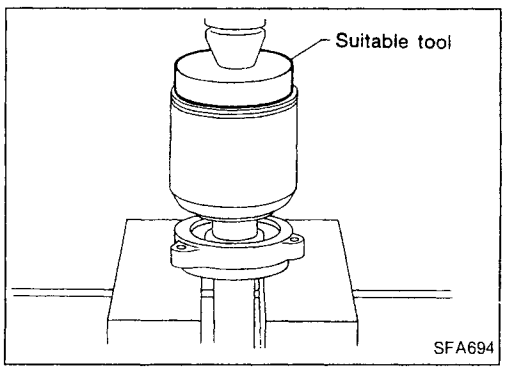

2. Press drive shaft into bearing.

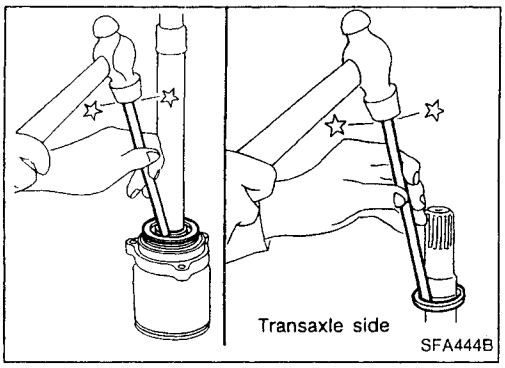

3. Install snap ring.
4. Install new dust shield.

FA

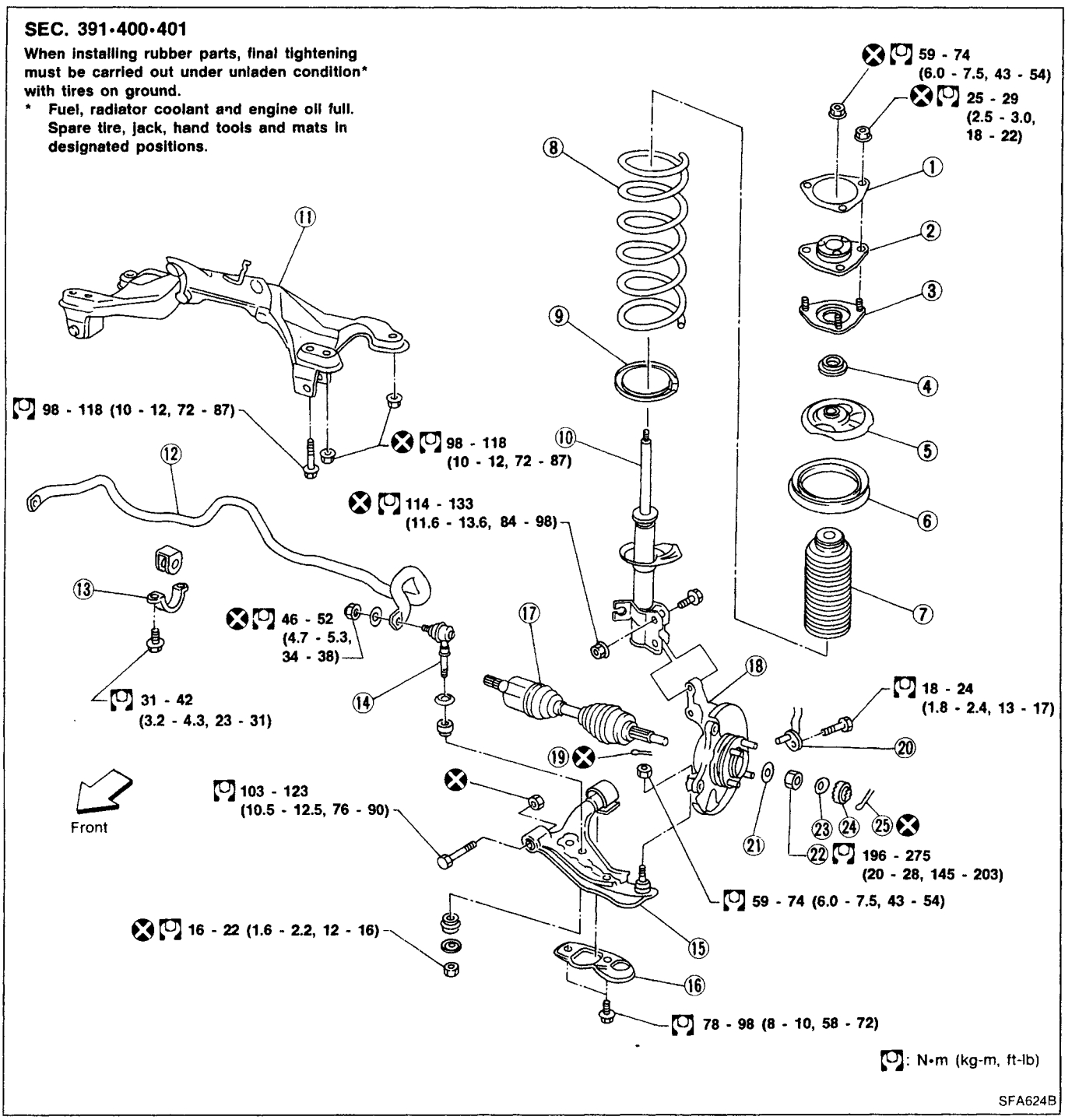

① Spacer
② Strut mounting insulator
③ Strut mounting insulator bracket
④ Thrust bearing
⑤ Upper spring seat
⑥ Upper spring rubber seat
⑦ Bumper rubber
⑧ Coil spring
⑨ Lower spring rubber seat
⑩ Strut assembly
⑪ Suspension member
⑫ Stabilizer bar
⑬ Stabilizer clamp
⑭ Connecting rod
⑮ Transverse link
⑯ Compression rod clamp
⑰ Drive shaft
⑱ Knuckle
⑲ Cotter pin
⑳ ABS sensor
㉑ Plain washer
㉒ Wheel bearing lock nut
㉓ Insulator
㉔ Adjusting cap
㉕ Cotter pin

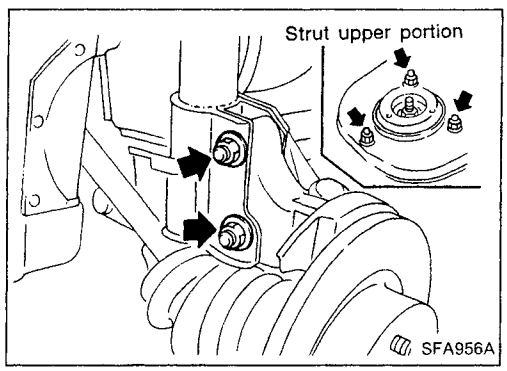

Coil Spring and Strut Assembly

REMOVAL AND INSTALLATION

- Remove strut assembly fixing bolts and nuts (to hoodledge).

Do not remove piston rod lock nut on vehicle.

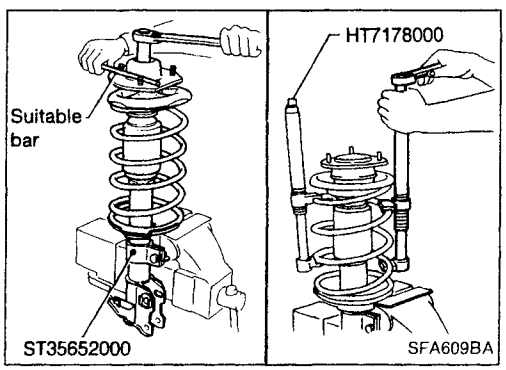

DISASSEMBLY

1. Set strut assembly on vise with Tool, then **loosen** piston rod lock nut.

Do not remove piston rod lock nut at this time.

2. Compress spring with Tool so that the strut mounting insulator can be turned by hand.

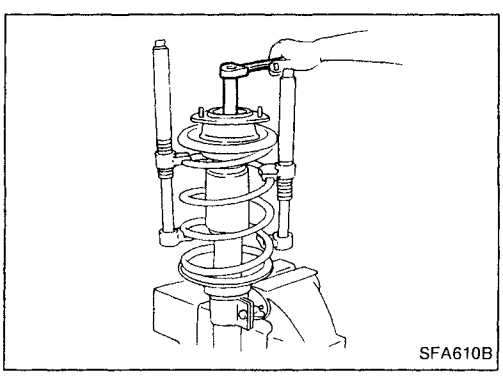

3. Remove piston rod lock nut.

FA

INSPECTION

Shock absorber assembly

- Check for smooth operation through a full stroke, both compression and extension.
- Check for oil leakage on welded or gland packing portion.
- Check piston rod for cracks, deformation or other damage.
- Replace if necessary.

Mounting insulator and rubber parts

- Check cemented rubber-to-metal portion for separation or cracks. Check rubber parts for deterioration.
- Replace if necessary.

Thrust bearing

- Check thrust bearing parts for abnormal noise or excessive rattle in axial direction. Replace if necessary.

Coil spring

- Check for cracks, deformation or other damage. Replace if necessary.

Coil Spring and Strut Assembly (Cont'd)

ASSEMBLY

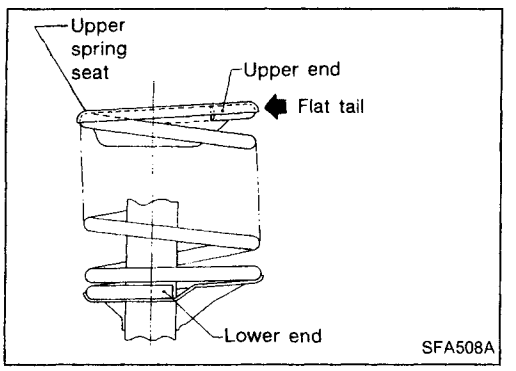

- When installing coil spring on strut, it must be positioned as shown in the figure at left.

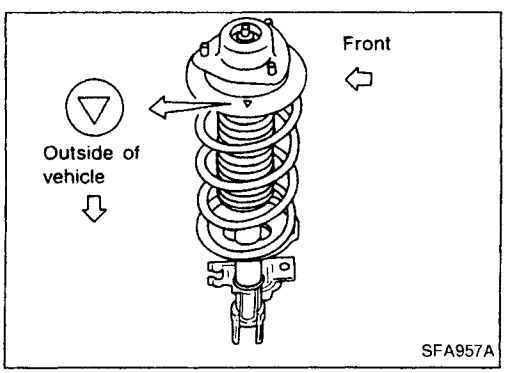

- When installing spring seat, make sure that it is positioned as shown.

Stabilizer Bar

REMOVAL AND INSTALLATION

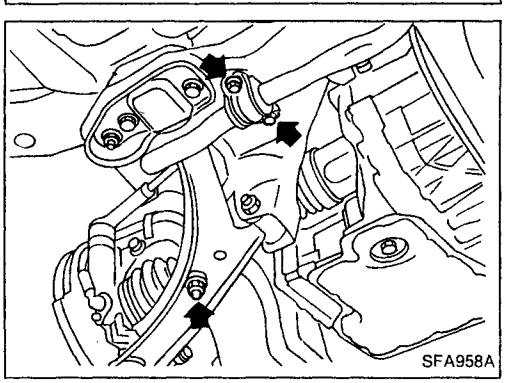

- Remove stabilizer bar.

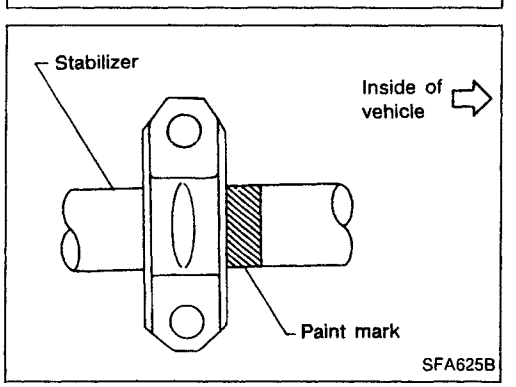

- When installing stabilizer, make sure that paint mark and clamp face in their correct directions.

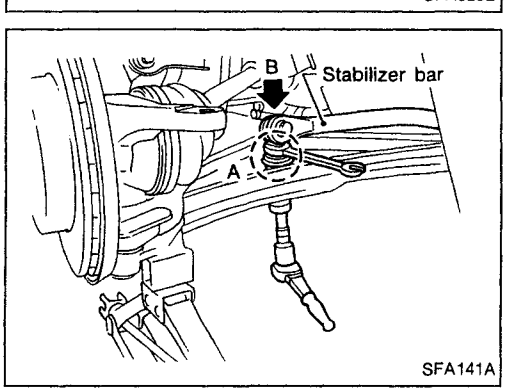

- When removing and installing stabilizer bar, fix portion A.

Stabilizer Bar (Cont'd)

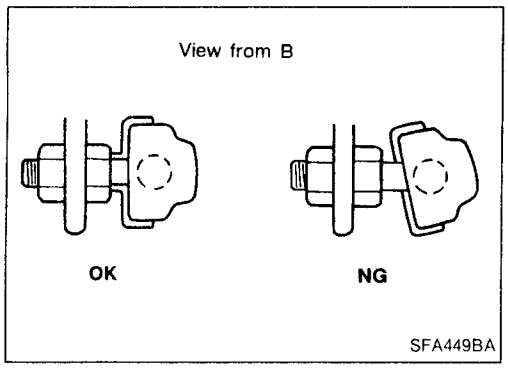

- Install stabilizer bar with ball joint socket properly placed.

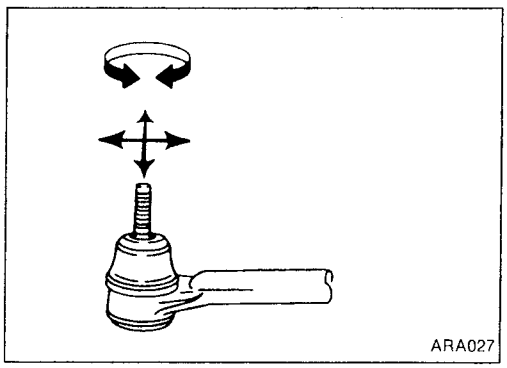

INSPECTION

- Check stabilizer for deformation or cracks. Replace if necessary.
- Check rubber bushings for deterioration or cracks. Replace if necessary.
- Check ball joint can rotate in all directions. If movement is not smooth and free, replace stabilizer bar connecting rod.

Transverse Link and Lower Ball Joint

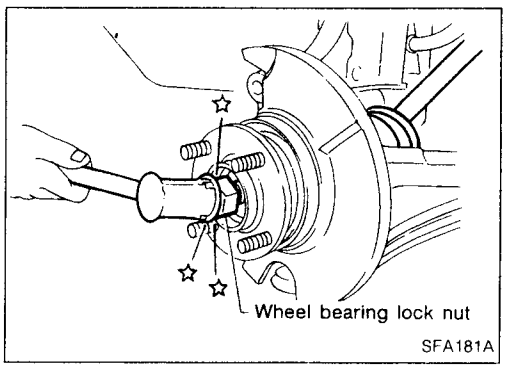

REMOVAL AND INSTALLATION

1. Remove wheel bearing lock nut.
2. Remove tie-rod ball joint.
3. Remove strut lower bracket fixing bolts and nuts.
4. Separate drive shaft from knuckle by slightly tapping drive shaft end.

Cover boots with shop towel so as not to damage them when removing drive shaft.

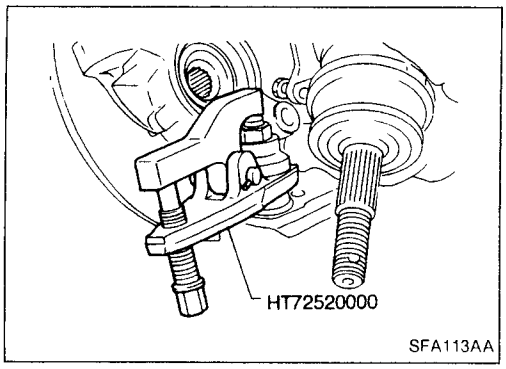

5. Separate lower ball joint stud from knuckle with Tool. Refer to FRONT AXLE — Wheel Hub and Knuckle (FA-8).

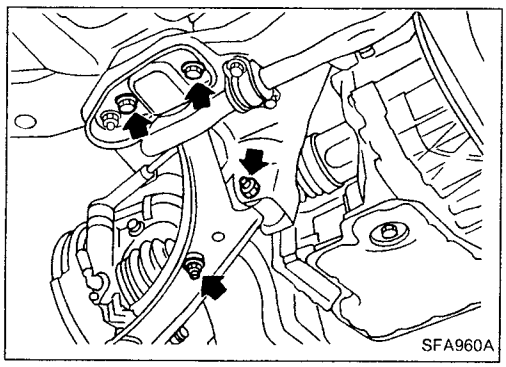

6. Remove fixing bolts and nuts as shown at left.
7. During installation, final tightening must be carried out at curb weight with tires on the ground.
8. After installation, check wheel alignment. Refer to ON-VEHICLE SERVICE — Front Wheel Alignment (FA-6).

FA

Transverse Link and Lower Ball Joint (Cont'd)

INSPECTION

- Check transverse link for damage, cracks or deformation. Replace if necessary.
- Check rubber bushing for damage, cracks and deformation. Replace transverse link if necessary.

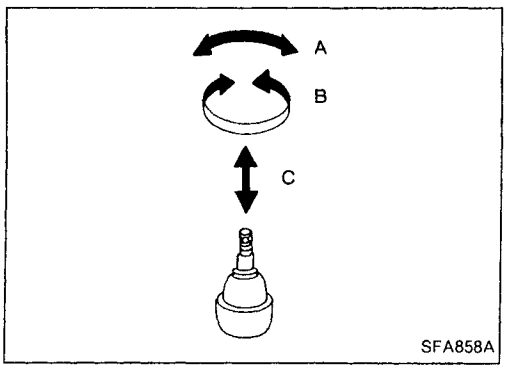

- Check ball joint for excessive play. Replace transverse link assembly if any of the following exists:
  - Ball stud is worn.
  - Joint is hard to swing.
  - Play in axial direction is excessive.

  Before checking, turn ball joint at least 10 revolutions so that ball joint is properly broken in.

  Swinging force "A":
  (measuring point: cotter pin hole of ball stud):
  8.24 - 57.37 N (0.84 - 5.85 kg, 1.85 - 12.90 lb)
  Turning torque "B":
  0.49 - 3.43 N·m (5.0 - 35 kg-cm, 4.3 - 30.4 in-lb)
  Vertical end play "C":
  0 mm (0 in)
- Check dust cover for damage. Replace it and cover clamp if necessary.

General Specifications

Suspension type	Independent macpherson struts
Strut type	Double-acting hydraulic
Stabilizer	For 14- and 15-inch wheel models

Inspection and Adjustment

WHEEL ALIGNMENT (Unladen*1)

Applied model				GA engine and SR engine models with 14-inch wheels	CD engine and SR engine models with 15-inch wheels
Camber		Degree minute (Decimal degree)	Minimum	–1°20′ (–1.33°)	
			Nominal	–0°35′ (–0.58°)	
			Maximum	0°10′ (0.17°)	
Caster		Degree minute (Decimal degree)	Minimum	0°40′ (0.67°)	
			Nominal	1°25′ (1.42°)	
			Maximum	2°10′ (2.17°)	
Kingpin inclination		Degree minute (Decimal degree)	Minimum	14°00′ (14.00°)	
			Nominal	14°45′ (14.75°)	
			Maximum	15°30′ (15.50°)	
Total toe-in	Distance (A - B)	mm (in)	Minimum	0 (0)	
			Nominal	2 (0.08)	
			Maximum	4 (0.16)	
	Angle (left plus right)	Degree minute (Decimal degree)	Minimum	0′ (0.00°)	
			Nominal	11′ (0.18°)	
			Maximum	22′ (0.37°)	
Wheel turning angle	Full turn*2 Inside	Degree minute (Decimal degree)	Minimum	38°00′ (38.00°)	34°00′ (34.00°)
			Nominal	41°00′ (41.00°)	37°00′ (37.00°)
			Maximum	42°00′ (42.00°)	38°00′ (38.00°)
	Full turn*2 Outside	Degree minute (Decimal degree)	Nominal	34°00′ (34.00°)	31°00′ (31.00°)

*1: Fuel, radiator coolant and engine oil full. Spare tire, jack, hand tools and mats in designated positions.

*2: On power steering models, wheel turning force (at circumference of steering wheel) of 98 to 147 N (10 to 15 kg, 22 to 33 lb) with engine idle.

FA

DRIVE SHAFT

Applied model	GA14DE, GA15DE	GA16DE, CD20	SR 20DE	
			RH	LH
Joint type				
Transaxle side	TS70C	TS79C	DS83	TS83
Wheel side	ZF80	ZF90	BF83	
Boot length mm (in)				
Transaxle side L_2	95.5 - 97.5 (3.76 - 3.84)	101.5 - 103.5 (4.00 - 4.07)	97 - 99 (3.82 - 3.90)	98 - 100 (3.86 - 3.94)
Wheel side L_1	90.5 - 92.5 (3.563 - 3.642)	96 - 98 (3.78 - 3.86)	94 - 96 (3.70 - 3.78)	
Grease	Nissan genuine grease or equivalent			
Capacity g (oz)				
Transaxle side	110 - 120 (3.88 - 4.23)	155 - 165 (5.47 - 5.82)	115 - 135 (4.06 - 4.76)	130 - 150 (4.59 - 5.29)
Wheel side	95 (3.35)	115 - 125 (4.06 - 4.41)	85 - 105 (3.00 - 3.70)	

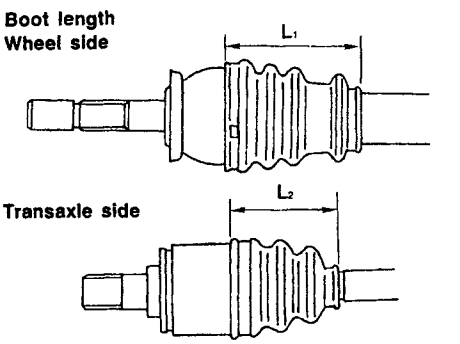

SFA396B

WHEEL BEARING

Wheel bearing axial end play limit mm (in)	0.05 (0.0020) or less
Wheel bearing lock nut tightening torque N·m (kg-m, ft-lb)	196 - 275 (20 - 28, 145 - 203)
Preload N·m (kg-cm, in-lb)	0.90 (9.2, 8.0)
At hub bolt N (kg, lb)	6.08 (0.62, 1.37)

WHEEL RUNOUT

Unit: mm (in)

Wheel type	Aluminum wheel	Steel wheel
Maximum radial runout limit	0.3 (0.012)	0.5 (0.020)
Maximum lateral runout limit	0.3 (0.012)	0.8 (0.031)

LOWER BALL JOINT

Swinging force "A" (Measured at cotter pin hole) N (kg, lb)	8.24 - 57.37 (0.84 - 5.85, 1.85 - 12.90)
Turning torque "B" N·m (kg-cm, in-lb)	0.49 - 3.43 (5.0 - 35, 4.3 - 30.4)
Vertical end play limit "C" mm (in)	0 (0)